Installation Instructions

SARGENT
ASSA ABLOY

7300 Series

Multi-Point Lock

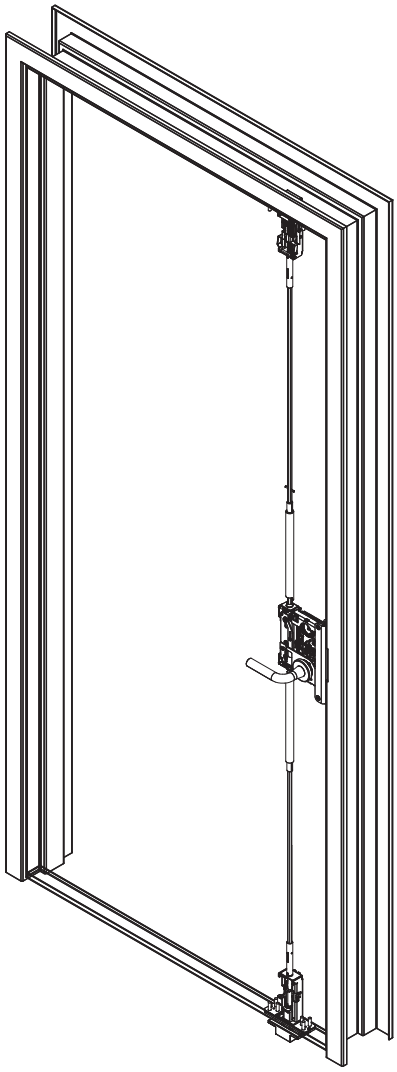

Important
The latches, rods, and cassette are pre-installed.
This product must be installed by a factory trained technician.

⚠ WARNING

This product can expose you to lead which is known to the state of California to cause cancer and birth defects or other reproductive harm. For more information go to www.P65warnings.ca.gov.

Copyright © 2017, 2019, 2020 SARGENT Manufacturing Company. All rights reserved. Reproduction in whole or in part without the express written permission of SARGENT Manufacturing Company is prohibited.

Experience a safer
and more open world

SARGENT
ASSA ABLOY

TOC	Table of Contents

1	Package Contents	4
2	Tools Required	5
a	Tools Required for Electronic Access Control (EAC) Shield	5
b	Tools Required for Dogging Indicator Option	5
3	Installation	6
a	Check Door	6
b	Door Installation	6
c	Install Top Strike into Door Frame	6
d	Install Center Strike into Door Frame	7
e	Remove Retractor Inserts	7
f	Check Latches (uninstalled)	7
g	Install Bottom Strike	8
h	Top and Bottom Latch Adjustment	10
i	Mortise Lock Install	12
j	Final Mortise Lock and Trim Installation	13
k	Electronic Access Control (EAC) Reader and Controller Installation	13
l	Key Override with Deadbolt Function Operation Check	13
4	Optional Installation	14
a	Dogging Indicator Installation	14

Copyright © 2017, 2019, 2020 SARGENT Manufacturing Company. All rights reserved. Reproduction in whole or in part without the express written permission of SARGENT Manufacturing Company is prohibited.

Experience a safer and more open world

SARGENT
ASSA ABLOY

5 Addendum 16
a Check Door 16
b Place Door Horizontal on Sawhorse 16
c Install Lockbody Cassette (LBC) 17
d Latch Rod Guides 17
e Feed Top Rod into Door 18
f Align with Lockbody Cassette (LBC) 18
g Troubleshoot Latch Installation 19
h Correct Rod Installation Check 19
i Secure Top Latch 20
j Tighten Set Screw 20
k Bottom Latch Installation 21
l Check Latch 21
m Mortise Reinforcer and Mortise Lock Installation 22

Copyright © 2017, 2019, 2020 SARGENT Manufacturing Company. All rights reserved. Reproduction in whole or in part without the express written permission of SARGENT Manufacturing Company is prohibited.

Experience a safer and more open world

SARGENT
ASSA ABLOY

1 Package Contents

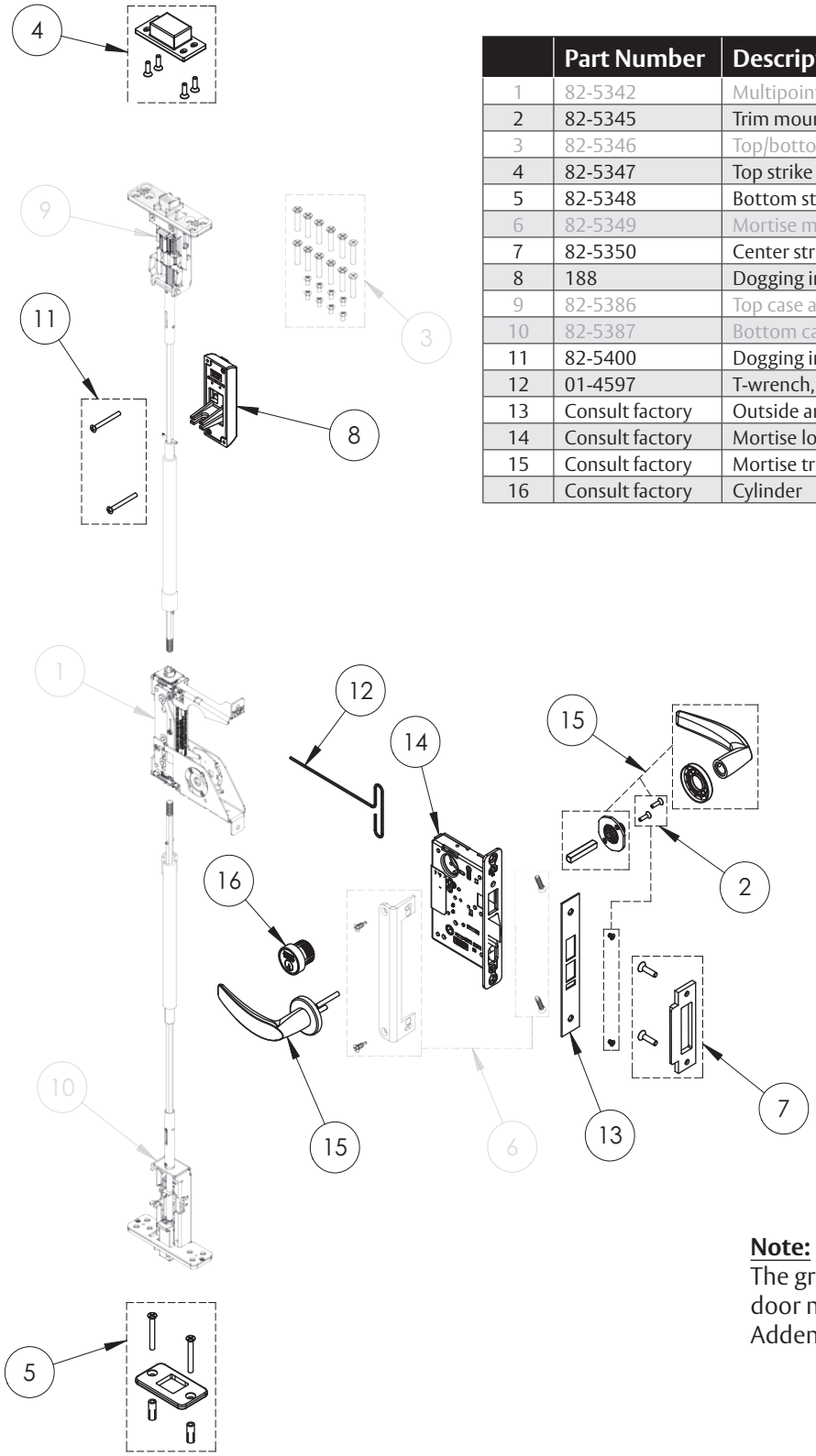

	Part Number	Description
1	82-5342	Multipoint cassette
2	82-5345	Trim mounting screw pack
3	82-5346	Top/bottom case mounting screw pack
4	82-5347	Top strike pack
5	82-5348	Bottom strike pack
6	82-5349	Mortise mounting/reinforcement pack
7	82-5350	Center strike pack
8	188	Dogging indicator (includes item 11) (specify finish)
9	82-5386	Top case and rod assembly (specify door size)
10	82-5387	Bottom case and rod assembly (specify door size)
11	82-5400	Dogging indicator screw pack (specify finish)
12	01-4597	T-wrench, adjustment
13	Consult factory	Outside armor front
14	Consult factory	Mortise lock
15	Consult factory	Mortise trim
16	Consult factory	Cylinder

Note:
The grayed parts are preinstalled by the door manufacturer and relate to the Addendum section beginning on page 16.

Copyright © 2017, 2019, 2020 SARGENT Manufacturing Company. All rights reserved. Reproduction in whole or in part without the express written permission of SARGENT Manufacturing Company is prohibited.

Experience a safer and more open world

SARGENT
ASSA ABLOY

2 Tools Required

Tape measure

Hammer

Flashlight

1/8" Allen (supplied)

3/32" Allen (supplied)

5/32" Allen

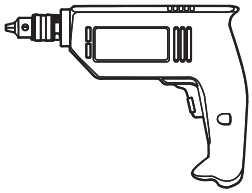
Drill

1/8" Masonry drill bit

#3 Phillips bit

Slotted screwdriver

#1, #2, #3 Phillips head screwdrivers

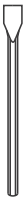
Chisel

3/8" Anchor set

a Tools Required for Electronic Access Control (EAC) Shield

#29 Drill bit (.136")

#8-32 Tap

b Tools Required for Dogging Indicator Option

#7 Drill bit (.201")

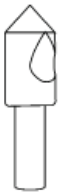
82° Countersink

Copyright © 2017, 2019, 2020 SARGENT Manufacturing Company. All rights reserved. Reproduction in whole or in part without the express written permission of SARGENT Manufacturing Company is prohibited.

Experience a safer and more open world

SARGENT
ASSA ABLOY

3 Installation

a Check Door

Verify the door is:

- Correct size and hand for opening.
- Correctly prepared to Template 4740.

IMPORTANT
If measurement is incorrect, DO NOT PROCEED WITH INSTALLATION. Contact door manufacturer.

(Figure 1)

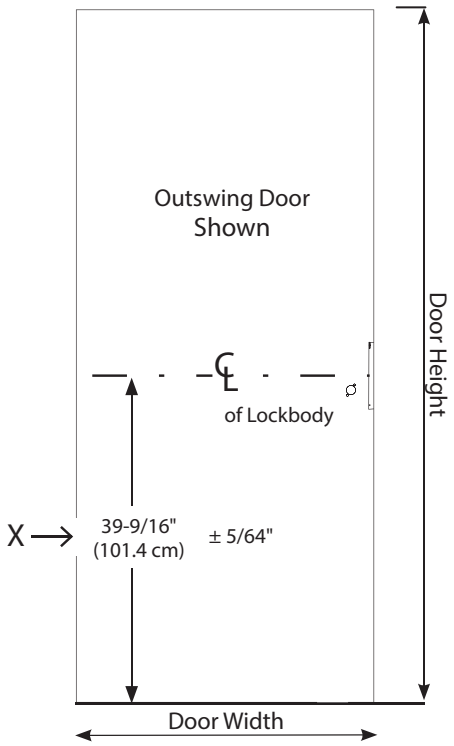

Figure 1

b Door Installation

Hang the door on the frame.

IMPORTANT
If the door rubs along the floor, do not complete this installation! Contact door manufacturer.

c Install Top Strike into Door Frame

- Remove the strike filler plate and screws and discard.
- Install four (4) #12-24 socket cap flat head screws. (Figure 2).

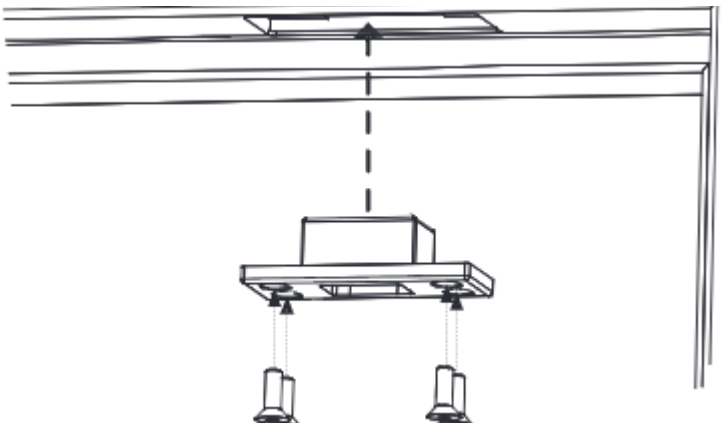

Figure 2

Copyright © 2017, 2019, 2020 SARGENT Manufacturing Company. All rights reserved. Reproduction in whole or in part without the express written permission of SARGENT Manufacturing Company is prohibited.

Experience a safer and more open world

SARGENT
ASSA ABLOY

3 Installation (cont.)

d Install Center Strike into Door Frame

- Install two (2) ¼-20 socket cap flat head screws. (Figure 3)

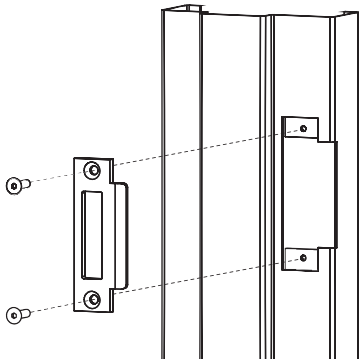

Figure 3

e Remove Retractor Inserts

WARNING
The door now has the ability to latch.

(Figure 4)

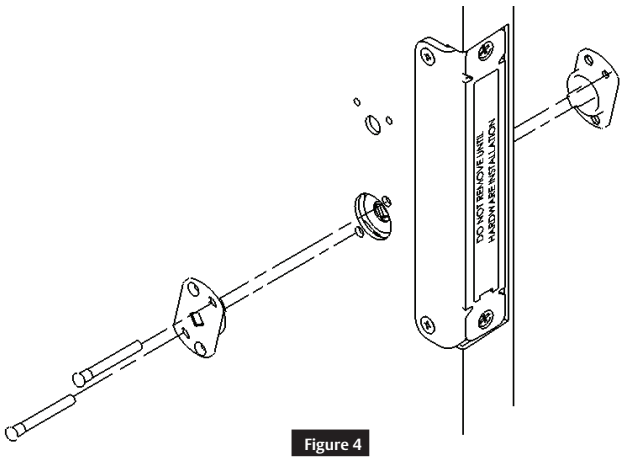

Figure 4

f Check Latches (uninstalled)

- Insert the uninstalled outside mortise trim and rotate to verify the top and bottom latches retract flush with the door. Do not install mortise trim at this time. (Figure 5)

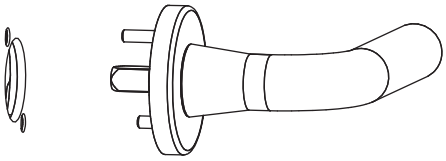

Figure 5

- Move the top strike back and forth until the top latch engages the strike. (Figure 6)

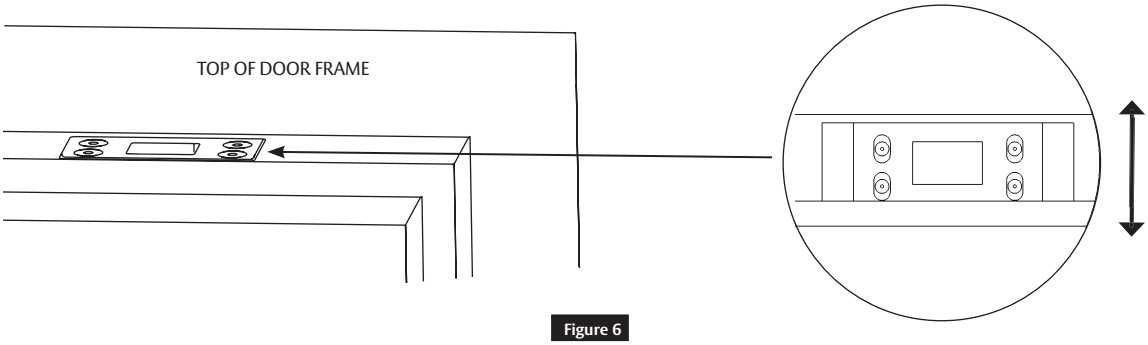

Figure 6

Copyright © 2017, 2019, 2020 SARGENT Manufacturing Company. All rights reserved. Reproduction in whole or in part without the express written permission of SARGENT Manufacturing Company is prohibited.

Experience a safer and more open world

SARGENT
ASSA ABLOY

3 Installation (cont.)

g Install Bottom Strike

- Close the door and mark the location of the bottom bolt.

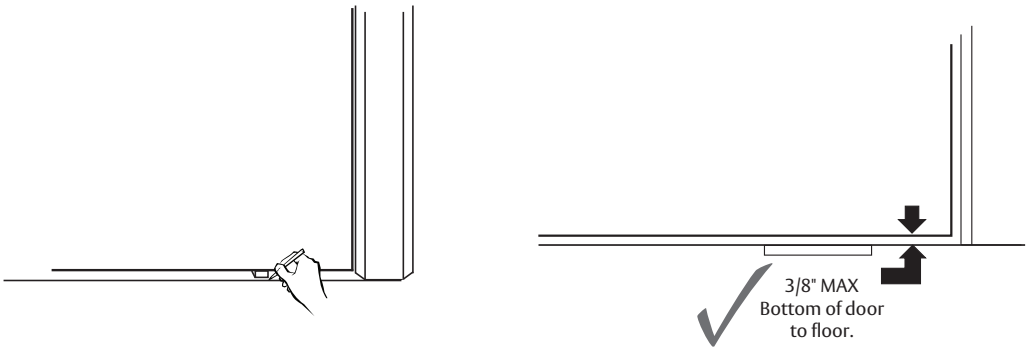

Figure 7

- Open the door and place the strike over the bottom bolt location. Mark the location of the bottom strike pocket and hole locations. (Figure 7)

Note:
The strike is **not** symetric. Install as shown. If needed, the strike can later be rotated to increase bolt clearance. (Figure 8)

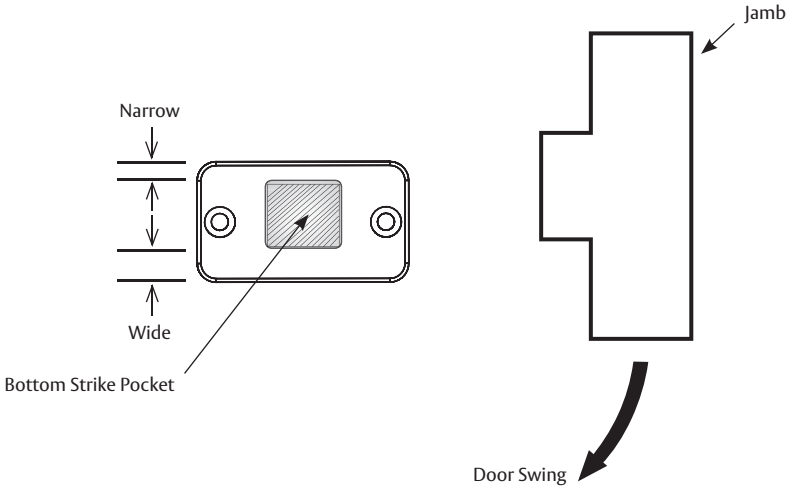

Figure 8

Copyright © 2017, 2019, 2020 SARGENT Manufacturing Company. All rights reserved. Reproduction in whole or in part without the express written permission of SARGENT Manufacturing Company is prohibited.

Experience a safer
and more open world

SARGENT
ASSA ABLOY

3 Installation (cont.)

g Install Bottom Strike (cont.)

Flush Mount (Figure 9)

Mortise the strike into the floor 1/4" deep.

(Optional for 3/8" door to floor gap.)

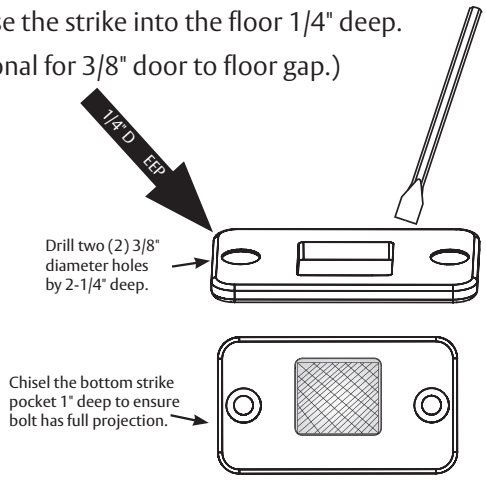

Figure 9

IMPORTANT

Use a vacuum or compressed air to clear holes of debris. (Figure 10)

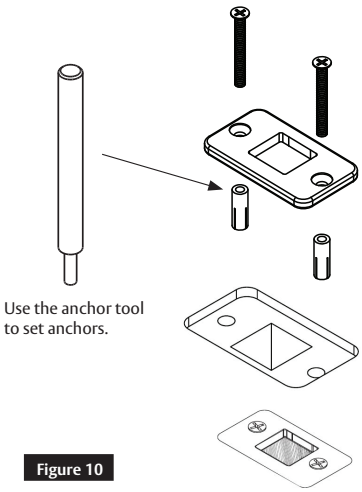

Figure 10

Cross Sectional View
Flush Mount (Figure 11)

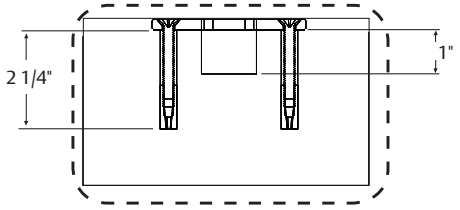

Figure 11

Surface Mount (Figure 12)

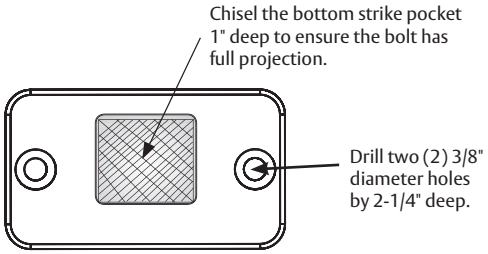

Figure 12

IMPORTANT

Use a vacuum or compressed air to clear holes of debris. (Figure 13)

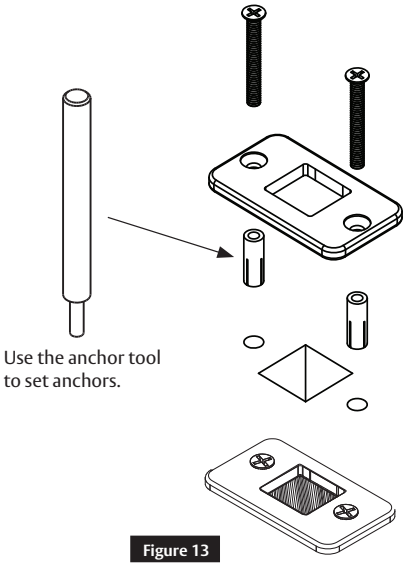

Figure 13

Cross Sectional View
Surface Mount (Figure 14)

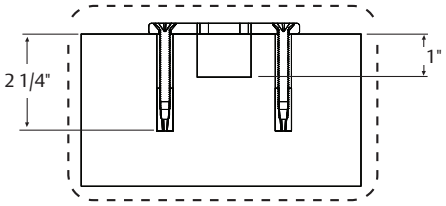

Figure 14

Copyright © 2017, 2019, 2020 SARGENT Manufacturing Company. All rights reserved. Reproduction in whole or in part without the express written permission of SARGENT Manufacturing Company is prohibited.

Experience a safer and more open world

SARGENT
ASSA ABLOY

3 Installation (cont.)

h Top and Bottom Latch Adjustment

- With the door hung, measure the clearance between the top and bottom bolts and strikes. (Figure 15)

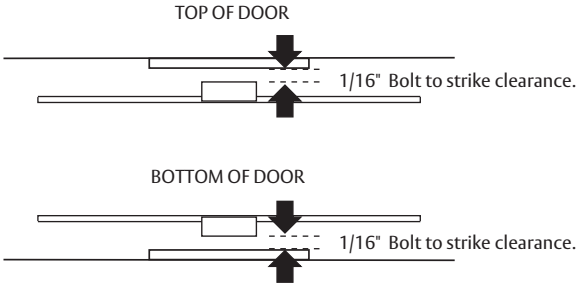

Figure 15

Note:
If both measurements equal 1/16" proceed to Step 3i, otherwise proceed with Step 3h as follows:

- Remove the mortise filler cap and discard. (Figure 16)

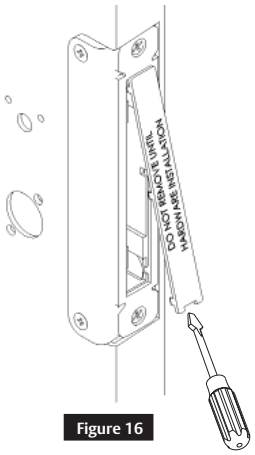
Figure 16

- Retract the latches by roting the lever and opening the door. (Figure 17)

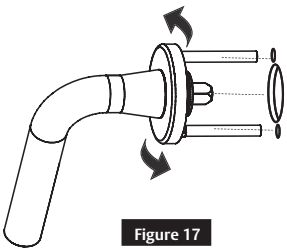
Figure 17

- Using the supplied 1/8" Allen wrench, loosen the set screw 1/4 turn maximum. This allows hex rods to rotate during the latch bolt adjustment. (Figure 18)

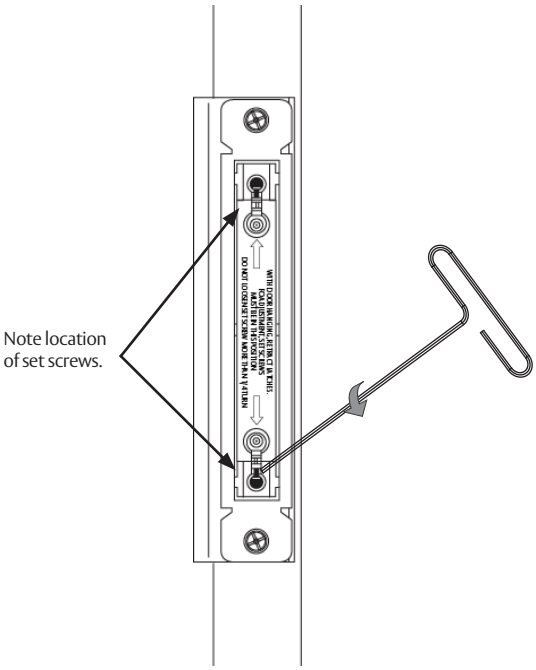

Figure 18

Copyright © 2017, 2019, 2020 SARGENT Manufacturing Company. All rights reserved. Reproduction in whole or in part without the express written permission of SARGENT Manufacturing Company is prohibited.

Experience a safer and more open world

SARGENT
ASSA ABLOY

3 Installation (cont.)

h Top and Bottom Latch Adjustment (cont.)

Using the supplied 3/32" Allen wrench, rotate the top or bottom worm gears according to the directions below (Figure 19). Bolt to strike clearance should equal 1/16". This sets the bolt projection. (Figure 20)

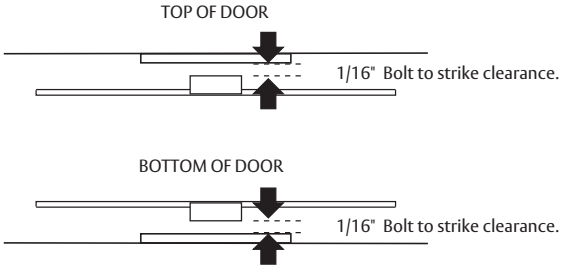

Figure 19

Note:
Ten (10) turns equals approximately 1/16".

Rotate the top: counterclockwise ↺ to project the bolt; clockwise ↻ to retract the bolt.

Rotate the bottom: counterclockwise ↺ to retract the bolt; clockwise ↻ to project the bolt.

Note:
Latches have bottomed if worm gears click.

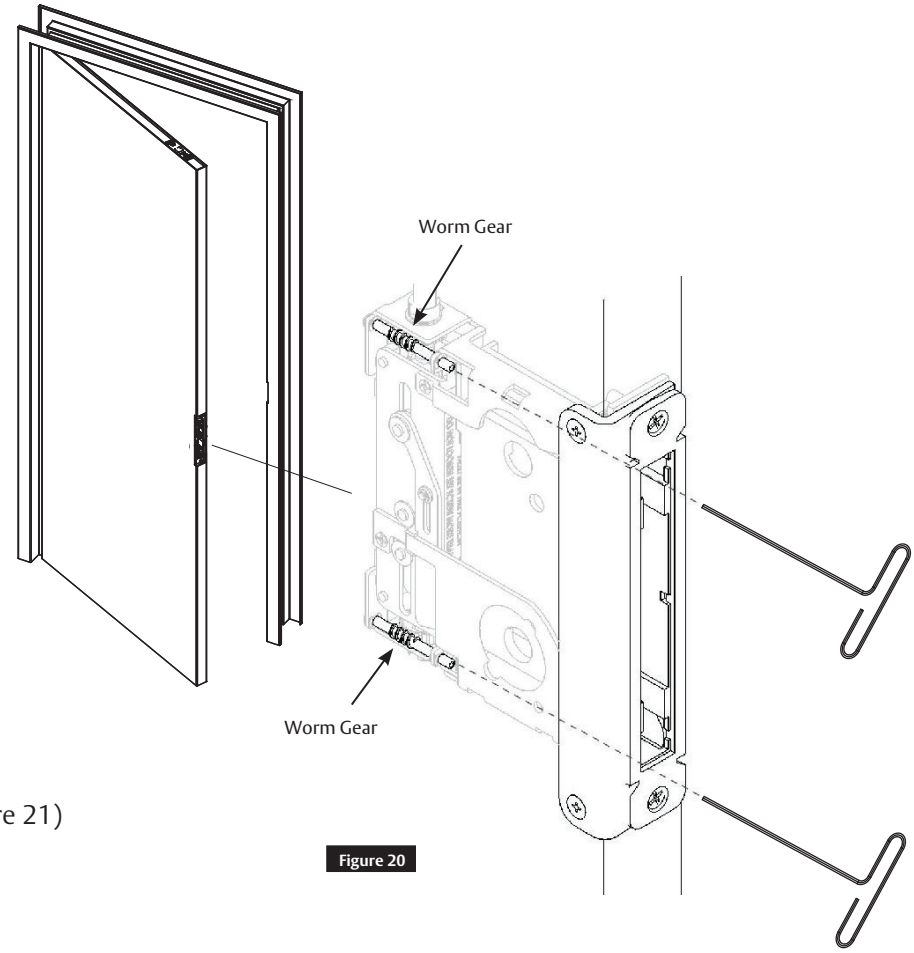

Figure 20

Tighten set screws. (Figure 21)

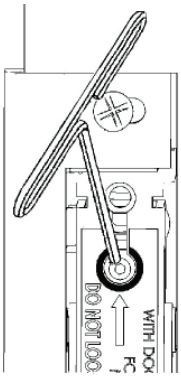
Figure 21

IMPORTANT
Set screws must be fully tightened after adjustment.

Copyright © 2017, 2019, 2020 SARGENT Manufacturing Company. All rights reserved. Reproduction in whole or in part without the express written permission of SARGENT Manufacturing Company is prohibited.

Experience a safer and more open world

SARGENT
ASSA ABLOY

3 Installation (cont.)

i Mortise Lock Install

- Remove the two (2) #12-24 x1" flat head mounting screws. (Figure 22)

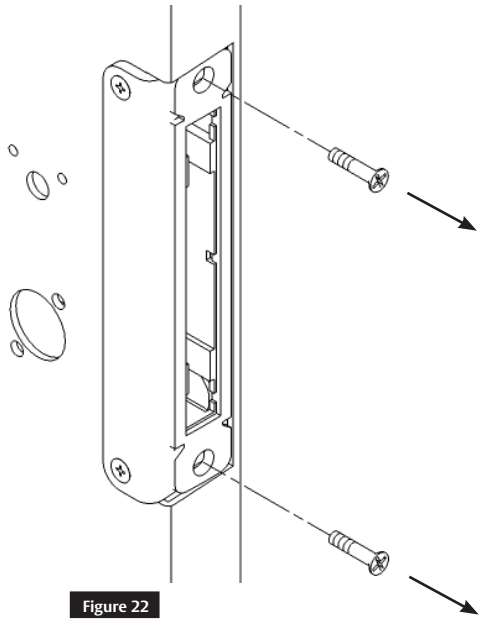

Figure 22

- Remove the mortise lock filler and discard. (Figure 23)

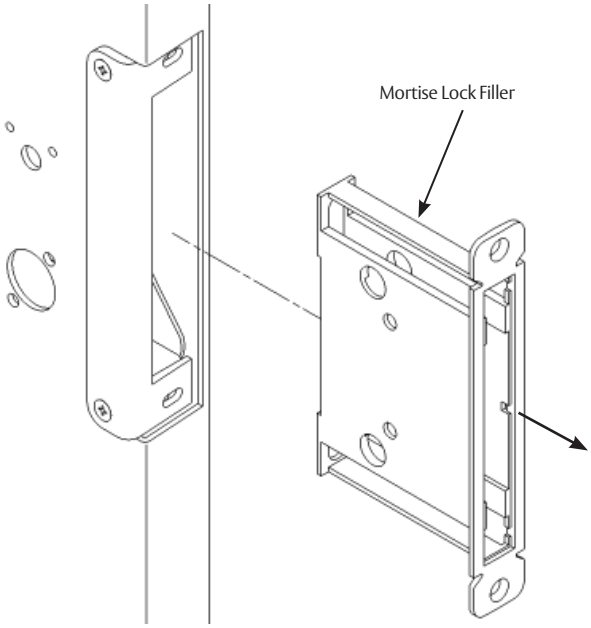

Figure 23

- Install the mortise lock, two (2) #12-24 x1" flat head mounting screws, outside front, and two (2) #8-32 x1/4" flat head screws. (Figure 24)

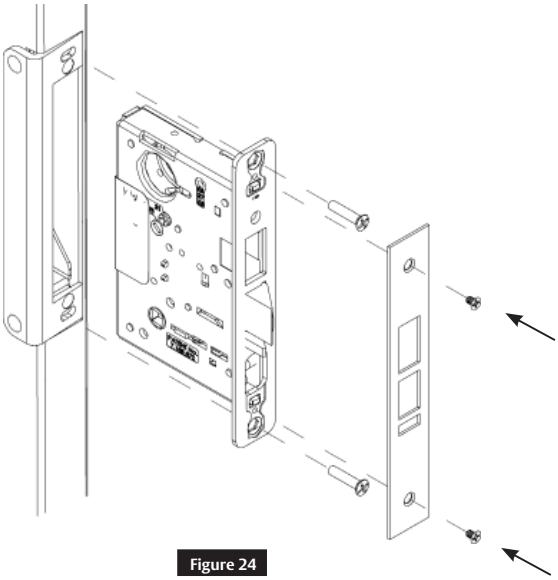

Figure 24

Copyright © 2017, 2019, 2020 SARGENT Manufacturing Company. All rights reserved. Reproduction in whole or in part without the express written permission of SARGENT Manufacturing Company is prohibited.

Experience a safer and more open world

SARGENT
ASSA ABLOY

3 Installation (cont.)

j Final Mortise Lock and Trim Installation

Follow the supplied mortise lock installation instructions for trim and other function related hardware.

k Electronic Access Control (EAC) Reader and Controller Installation

Follow supplied EAC Installation Instructions (if applicable).

l Key Override with Deadbolt Function Operation Check

Verify hand and bevel of door to determine direction to rotate key and lever. Stand on outside of locked door when determining door hand. (Figure 26)

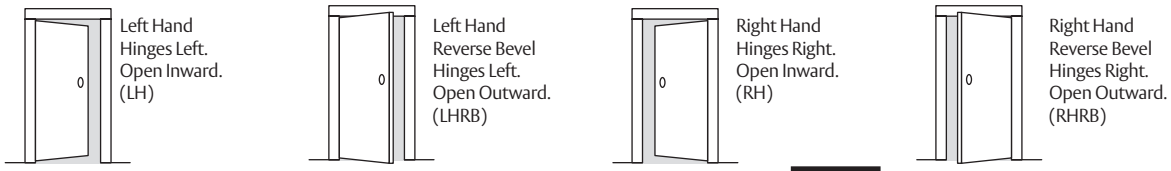

Figure 25

1. Rotate key to retract latch and hold. (Do not touch lever).
2. Continue holding key, rotate lever with other hand and open door. (Figure 27)

Note:
Graphic is for reference only; it does not represent all door hand options.

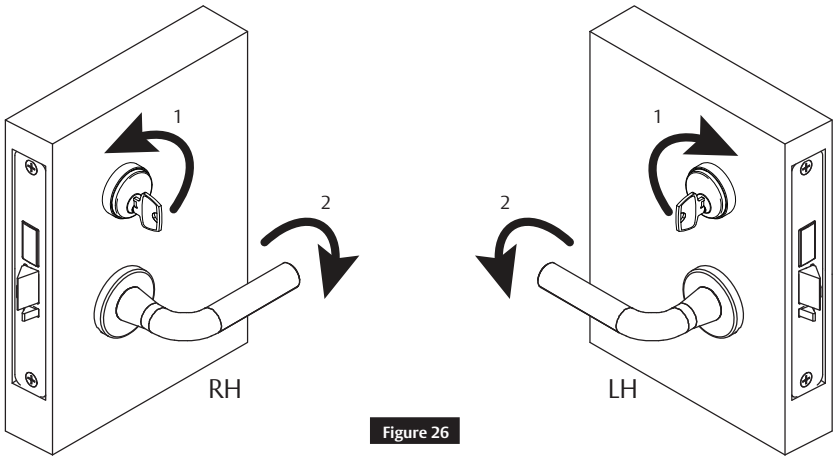

Figure 26

Copyright © 2017, 2019, 2020 SARGENT Manufacturing Company. All rights reserved. Reproduction in whole or in part without the express written permission of SARGENT Manufacturing Company is prohibited.

Experience a safer and more open world

SARGENT
ASSA ABLOY

4 Optional Installation

a Dogging Indicator Installation

- Ensure the door is latched and all bolts are projected.
- Place the plastic field template on the pin in the top rod through the oval cut-out in the door. (Figure 27)

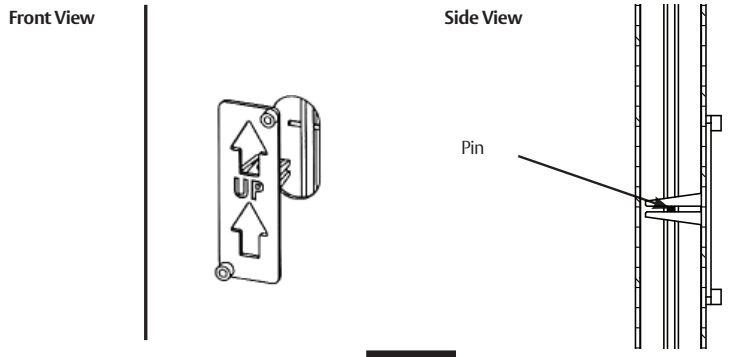

Figure 27

- Using a #7 drill bit, drill two (2) holes completely through the door, making sure the drill remains square to the face of the door. (Figure 28)

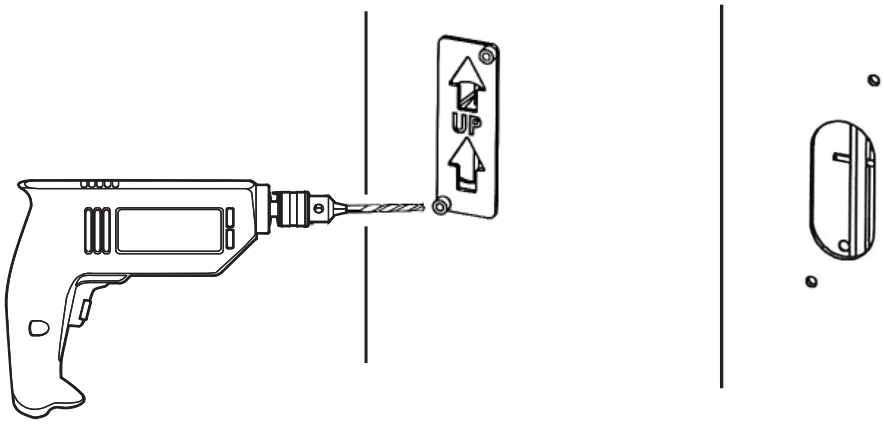

Figure 28

- Countersink holes on the opposite face of the door to fit the supplied oval head screws. (Figure 29)

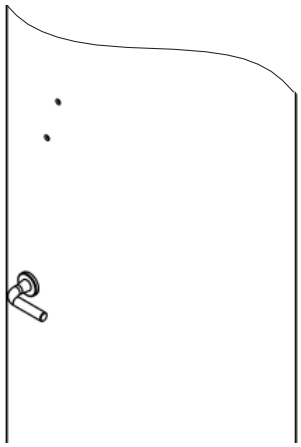

Figure 29

Copyright © 2017, 2019, 2020 SARGENT Manufacturing Company. All rights reserved. Reproduction in whole or in part without the express written permission of SARGENT Manufacturing Company is prohibited.

Experience a safer and more open world

SARGENT
ASSA ABLOY

4 Optional Installation (cont.)

a Dogging Indicator Installation (cont.)

Install the indicator on the inside of the door using supplied 10-24 x 2" oval head screws. Make sure the control fingers grab the top rod pin as shown. (Figure 30)

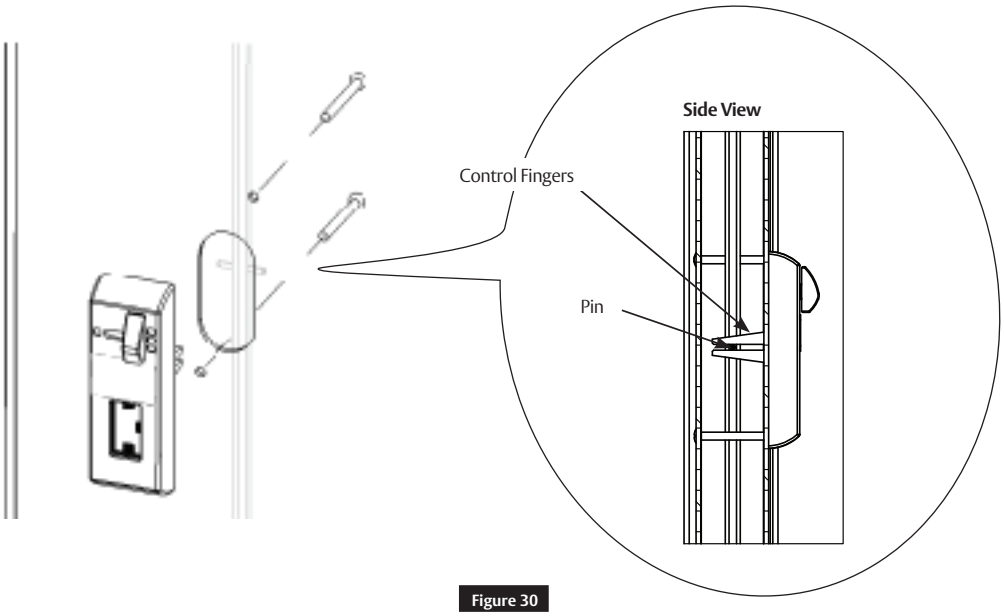

Figure 30

Check for proper operation. Rotate the lever until the indicator window shows a single latch point. (Figure 31)

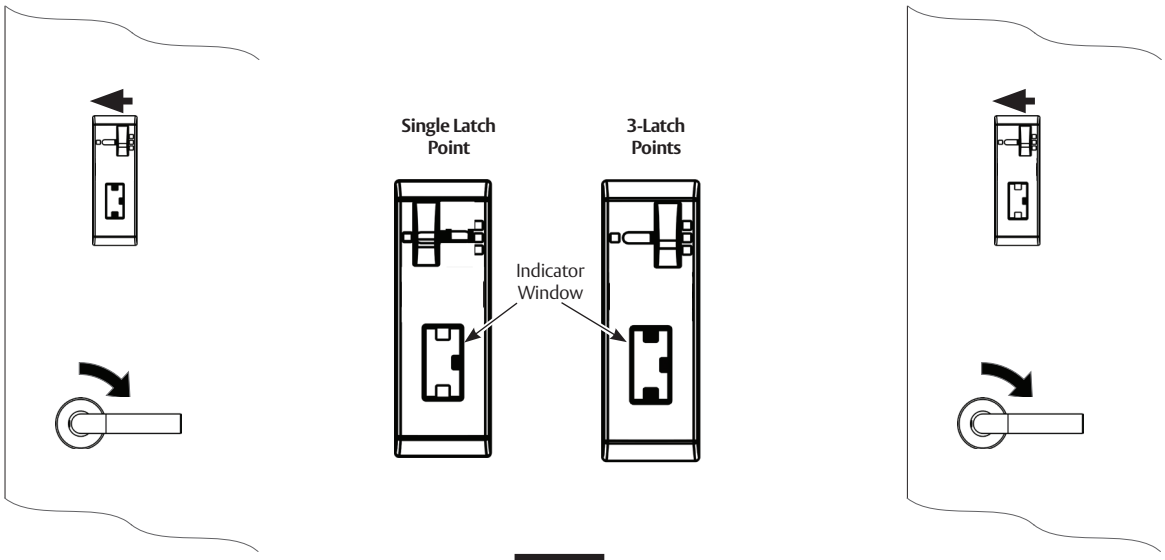

Figure 31

Note:
To dog the top and bottom latches in a retracted state, fully rotate the lever and move the slider on the indicator to the left.

Copyright © 2017, 2019, 2020 SARGENT Manufacturing Company. All rights reserved. Reproduction in whole or in part without the express written permission of SARGENT Manufacturing Company is prohibited.

Experience a safer and more open world

SARGENT
ASSA ABLOY

5 Addendum

This addendum is to be used as a reference for pre-installed hardware (latches and cassette). The following steps are for ease of reference as they have been completed in advance by the door manufacturer.

a Check Door

Verify the door is:

- Correct size and hand for opening.
- Correctly prepared to Template 4740.

(Figure 32)

IMPORTANT
If measurement is incorrect, DO NOT PROCEED WITH INSTALLATION. Contact door manufacturer.

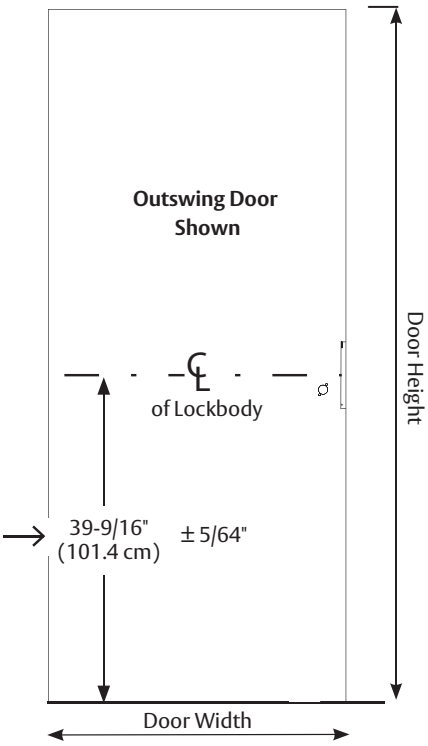

Figure 32

b Place Door Horizontal on Sawhorse

(Figure 33)

Note:
Orient the door face holes on top.

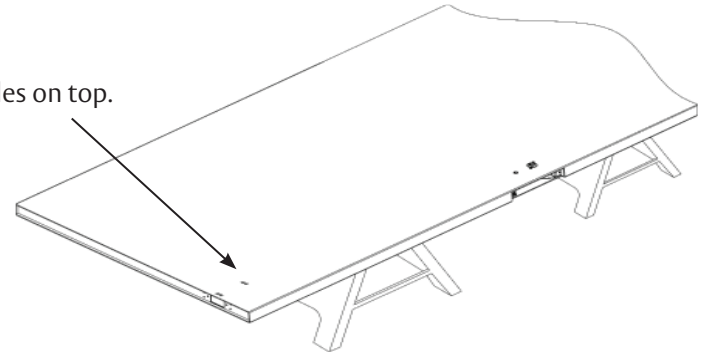

Figure 33

Copyright © 2017, 2019, 2020 SARGENT Manufacturing Company. All rights reserved. Reproduction in whole or in part without the express written permission of SARGENT Manufacturing Company is prohibited.

Experience a safer
and more open world

SARGENT
ASSA ABLOY

5 Addendum (cont.)

c Install Lockbody Cassette (LBC)

- Using the supplied 3/32" Allen wrench, rotate both LBC worm gears to align slots in the LBC gears to the orientation shown. (Figure 34)

  Alignment is needed for proper installation of the rod guide. (Step 3h)

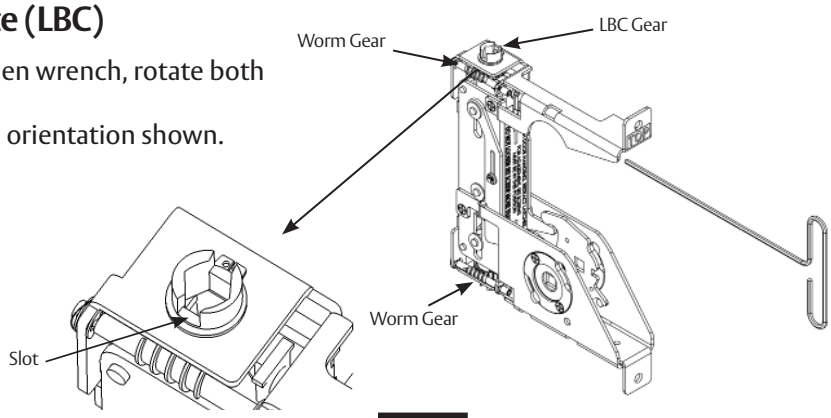

Figure 34

- Slide the LBC into the door case and secure with two (2) #12-24x1" flat head screws. (Figure 35)

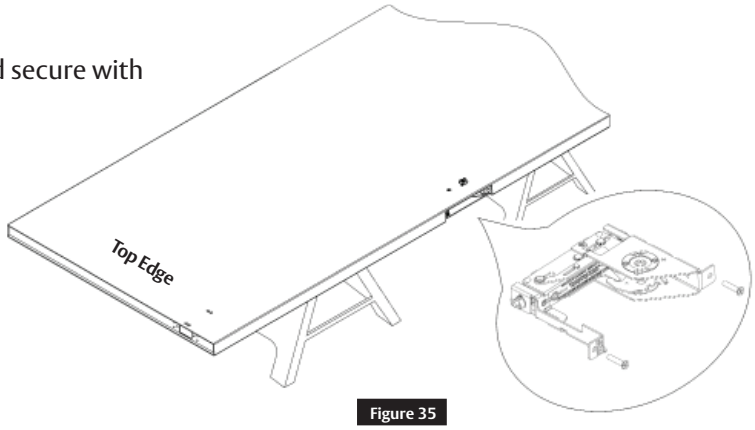

Figure 35

d Latch Rod Guides

- Rod guides help installation by directing the rod into location in the LBC within the door cavity.
- Pull rod guides away from latches on both rods until they stop. (Figure 36)

Note:
Bolt retainer clips must remain attached until step 5g.

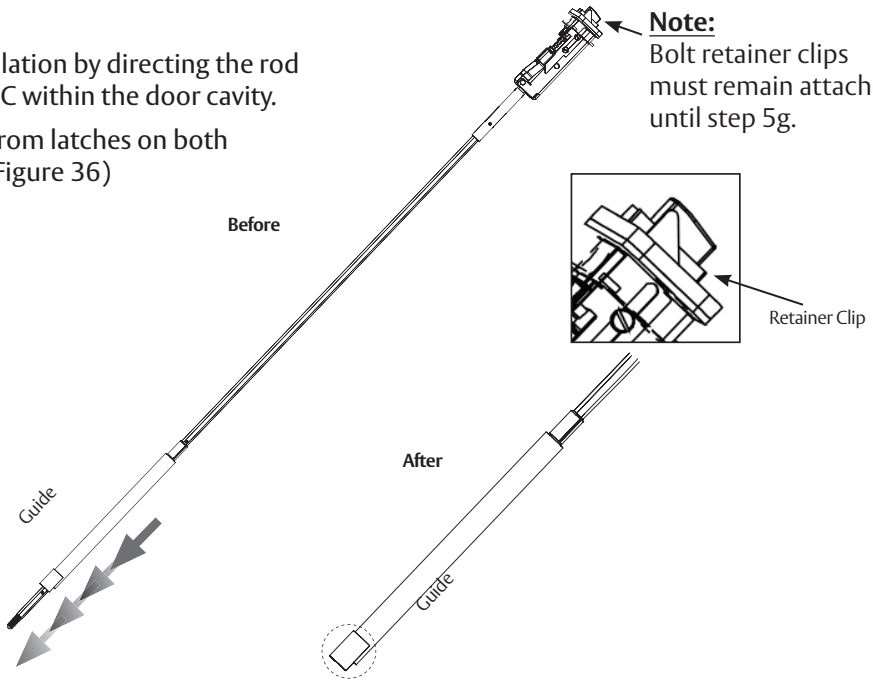

Figure 36

Copyright © 2017, 2019, 2020 SARGENT Manufacturing Company. All rights reserved. Reproduction in whole or in part without the express written permission of SARGENT Manufacturing Company is prohibited.

Experience a safer and more open world

5 Addendum (cont.)

e Feed Top Rod into Door

- Orient the latch chassis as shown. Rotate the rod and rod guide so the rod guide tab faces up. Slide the rod assembly into the door. Make sure the rod guide remains in the correct orientation with the guide tab facing up. (Figure 37)

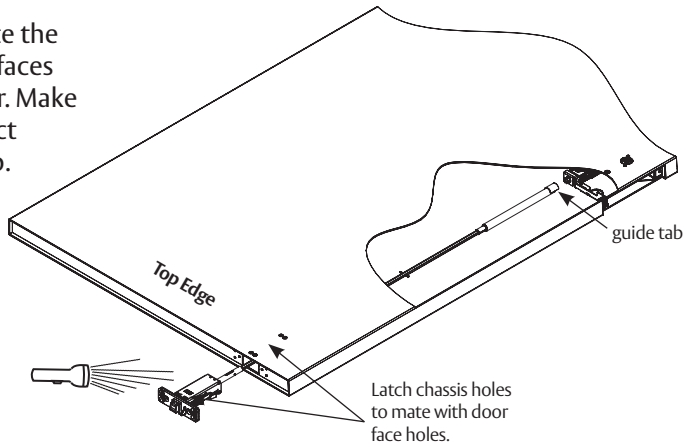

Figure 37

f Align with Lockbody Cassette (LBC)

- When approaching the LBC, slightly elevate the rod and slide the guide tab on outer diameter of the LBC gear. (Figure 38)

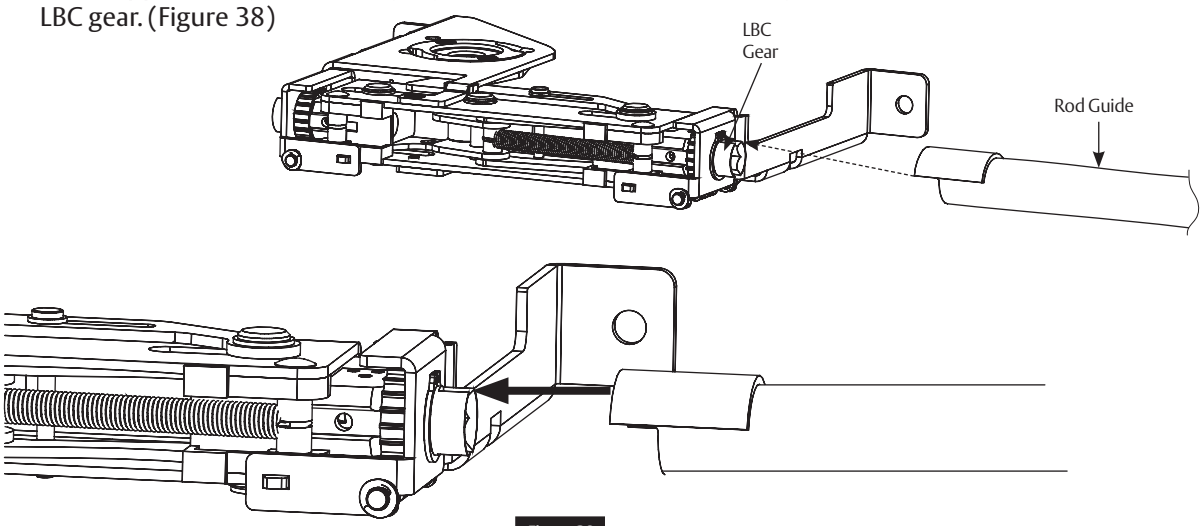

Figure 38

- To align the hex of rod with the hex of the LBC gear, fit the rod guide tab into the LBC gear slot. Once aligned, push the rod assembly in until fully seated. (Figure 39)

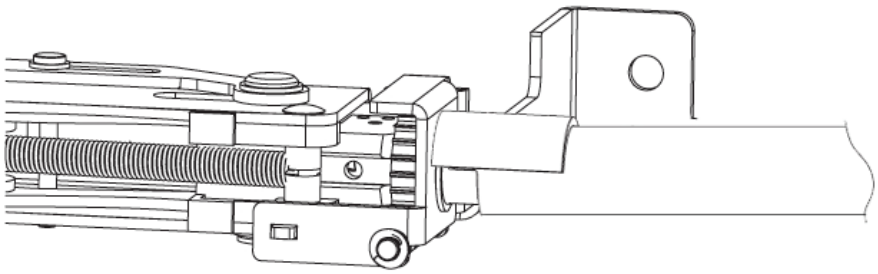

Figure 39

Copyright © 2017, 2019, 2020 SARGENT Manufacturing Company. All rights reserved. Reproduction in whole or in part without the express written permission of SARGENT Manufacturing Company is prohibited.

Experience a safer
and more open world

5 Addendum (cont.)

g Troubleshoot Latch Installation

- If the latch will not fully seat in the door, rod or rod guide is not aligned properly with LBC gear. (Figure 40)

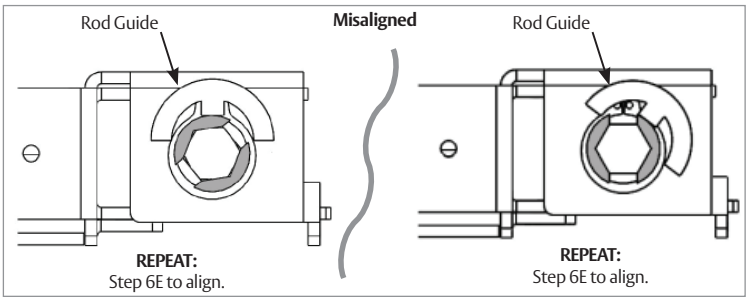

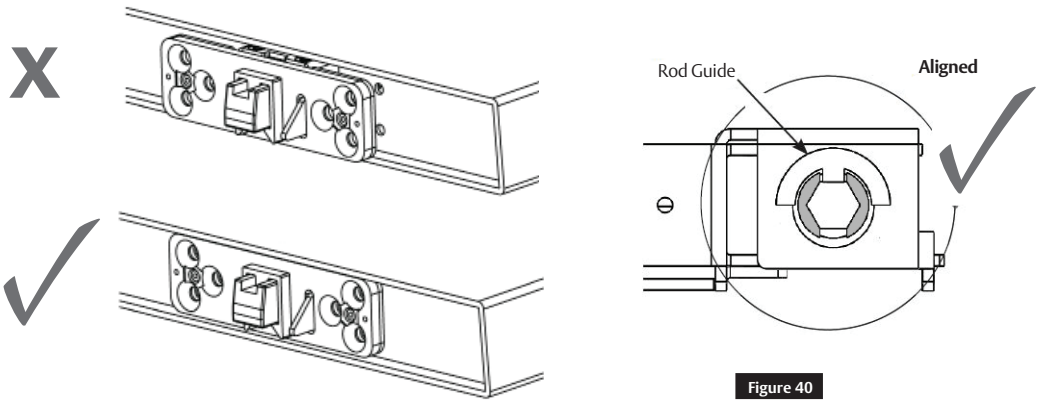

Figure 40

h Correct Rod Installation Check

- Be certain a portion of the red end of the rod can be seen in the LBC viewing window and set screw is in the location shown. (Figure 41)

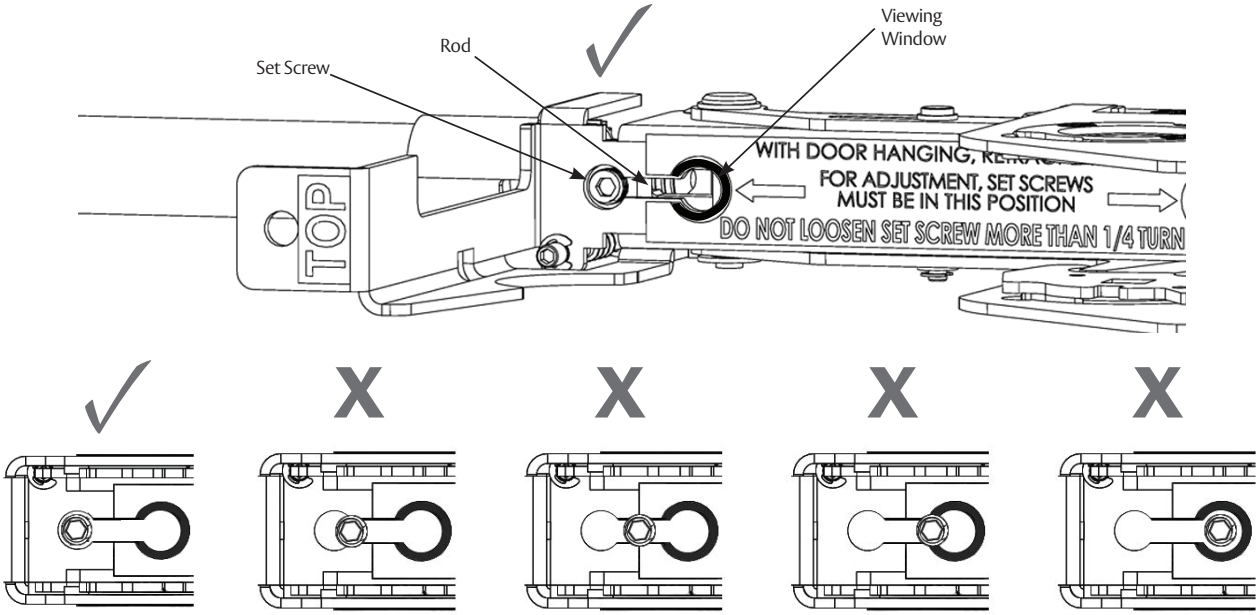

Figure 41

Copyright © 2017, 2019, 2020 SARGENT Manufacturing Company. All rights reserved. Reproduction in whole or in part without the express written permission of SARGENT Manufacturing Company is prohibited.

Experience a safer and more open world

SARGENT
ASSA ABLOY

5 Addendum (cont.)

i Secure Top Latch

- Install four (4) 10-24 oval head screws on the face of the door. (Figure 42)

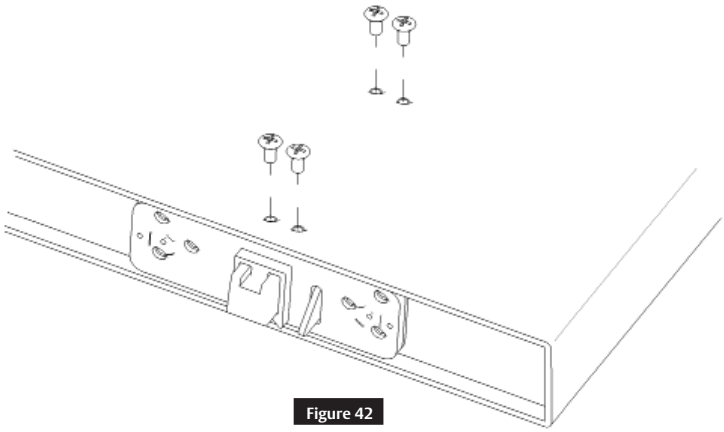

Figure 42

- Install six (6) 1/4-20 flat head screws in the top edge of the door. (Figure 43)

Note:
Do not fully tighten until all screws are installed.

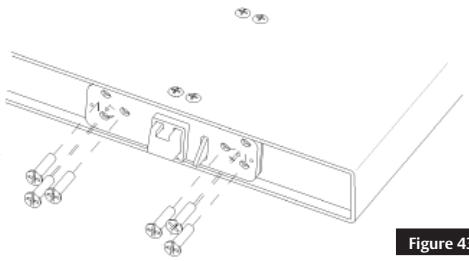

Figure 43

j Tighten Set Screw

Using the supplied 1/8" Allen wrench, tighten the set screw to secure the rod to the LBC. (Figure 44)

IMPORTANT
Latches will not retract if the set screw is not tightened.

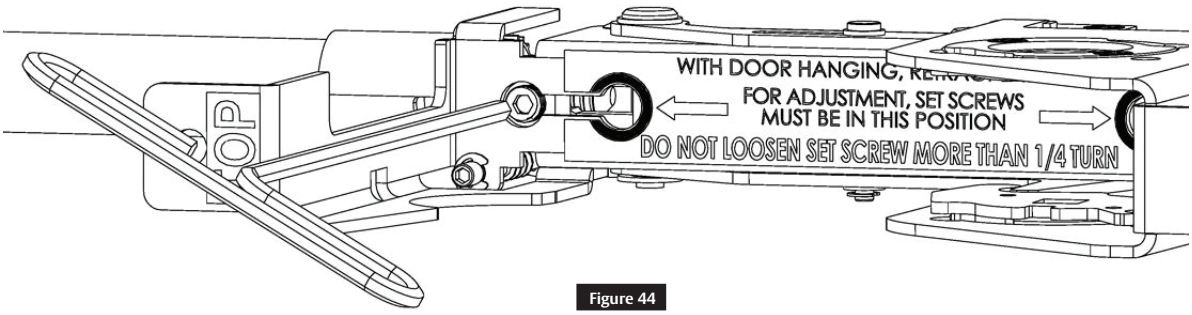

Figure 44

Copyright © 2017, 2019, 2020 SARGENT Manufacturing Company. All rights reserved. Reproduction in whole or in part without the express written permission of SARGENT Manufacturing Company is prohibited.

Experience a safer and more open world

SARGENT
ASSA ABLOY

5 Addendum (cont.)

k Bottom Latch Installation

REPEAT

Steps 5e through 5k to install bottom latch. (Figure 45)

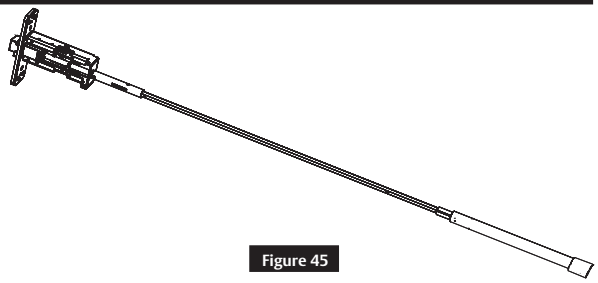

Figure 45

l Check Latch

- Remove the bolt retainer clips from the top and bottom latch assemblies. (Figure 46)

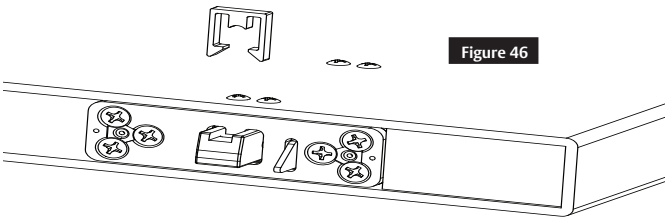

Figure 46

- Insert mortise trim in the door prep and cassette and rotate to verify latches fully retract (Figure 47).

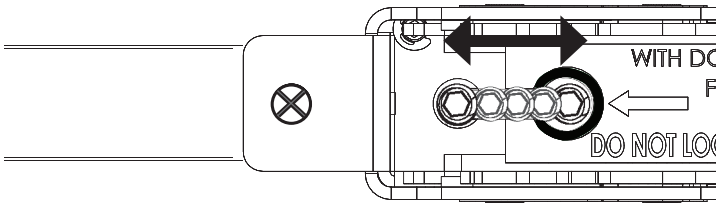

Figure 47

- Confirm the set screw moves from circle to circle in the LBC viewing window (Figure 48). Do not install the mortise lock at this time.

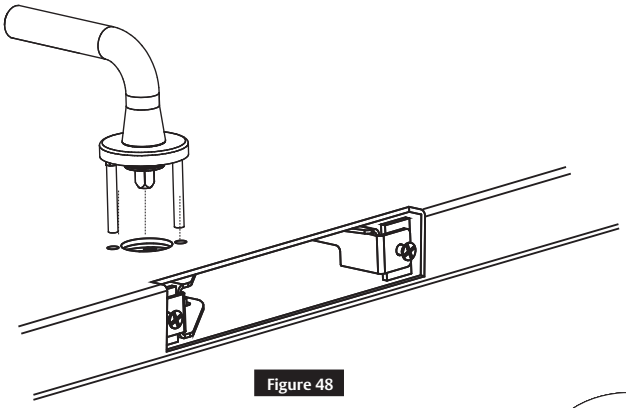

Figure 48

Note:
Push the black plunger on the top latch to project bolts. (Figure 49)

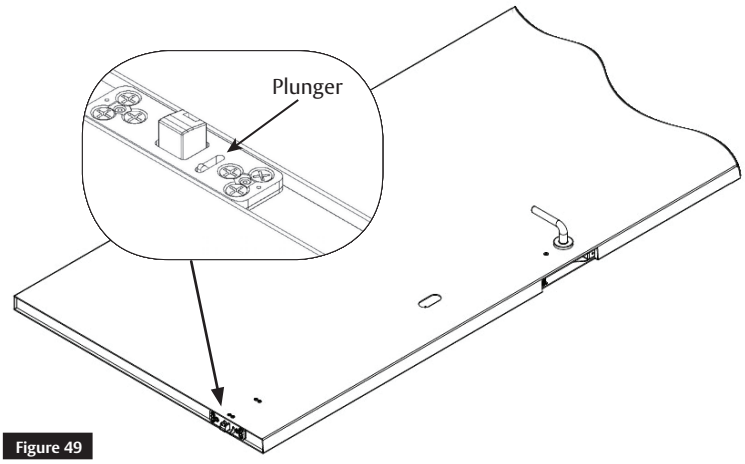

Figure 49

Copyright © 2017, 2019, 2020 SARGENT Manufacturing Company. All rights reserved. Reproduction in whole or in part without the express written permission of SARGENT Manufacturing Company is prohibited.

Experience a safer and more open world

5 Addendum (cont.)

m Mortise Reinforcer and Mortise Lock Installation

- Remove the two (2) #12-24x1" flat head LBC mounting screws that are securing the lockbody case in the door. (Figure 50)
- Place mortise reinforcer into the door.
- Reinstall two (2) #12-24x1" flat head LBC mounting screws (DO NOT FORCE).
- Install two (2) #12x1/4" self tapping screws through mortise reinforcer into the face of the door. (Figure 51)

Note:
Reinforcer lip belongs on the side of the door that has a special cutout at the door edge.

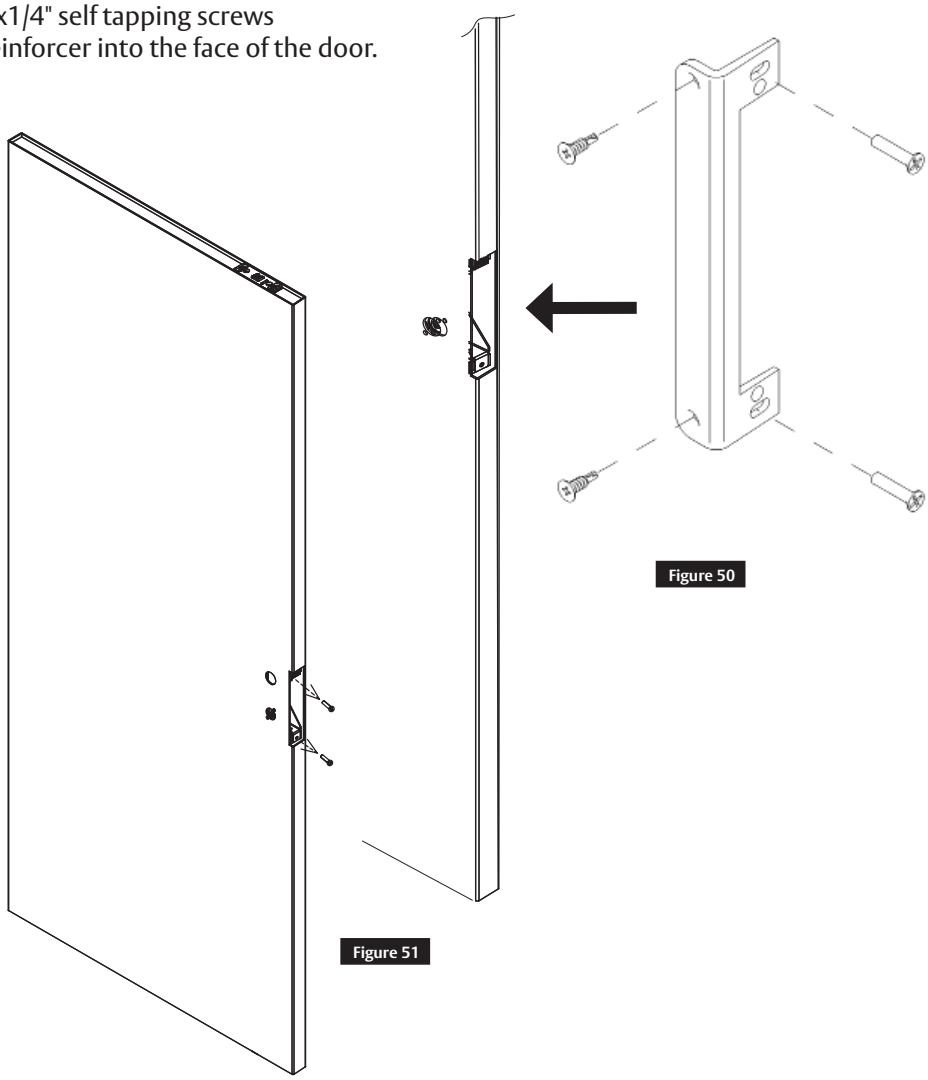

Figure 50

Figure 51

Copyright © 2017, 2019, 2020 SARGENT Manufacturing Company. All rights reserved. Reproduction in whole or in part without the express written permission of SARGENT Manufacturing Company is prohibited.

Experience a safer and more open world

Copyright © 2017, 2019, 2020 SARGENT Manufacturing Company. All rights reserved. Reproduction in whole or in part without the express written permission of SARGENT Manufacturing Company is prohibited.

Experience a safer
and more open world

The ASSA ABLOY Group is the global leader in access solutions. Every day, we help billions of people experience a more open world.

ASSA ABLOY Opening Solutions leads the development within door openings and products for access solutions in homes, businesses and institutions. Our offering includes doors, frames, door and window hardware, locks, perimeter fencing, access control and service.

SARGENT Manufacturing Company
100 Sargent Drive
New Haven, CT 06511 USA
800-727-5477
www.sargentlock.com

Founded in the early 1800s, SARGENT® is a market leader in locksets, cylinders, door closers, exit devices, electro-mechanical products and access control systems for new construction, renovation, and replacement applications. The company's customer base includes commercial construction, institutional, and industrial markets.

Copyright © 2017, 2019, 2020 SARGENT Manufacturing Company. All rights reserved. Reproduction in whole or in part without the express written permission of SARGENT Manufacturing Company is prohibited.

A8270A
02/20